FREESTANDING

CONVECTION BOX

14 KW DOUBLE SIDED

infiniti fires

A NEW GENERATION IN HEATING



14 KW DOUBLE SIDED CONVECTION UNIT WITH WOOD STORAGE BOX

Our Double Sided Freestanding Units are great for positioning near the middle of a large open plan area, to provide heat and the visual appeal of the flames to both sides.

Both doors can easily open, enabling the fire to be fed from either side and the glass to be easily cleaned when necessary.

This Double Sided Convection Stove can be placed on any non-combustible surface.

For increased visual appeal and good wood storage, it can be placed on one of our Double Sided Wood Boxes that match the size of the Convection Stove.

HEATING CAPACITY

14 Kw ▶ 560 m³

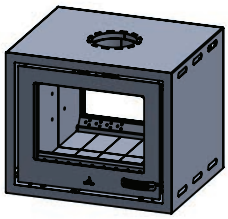

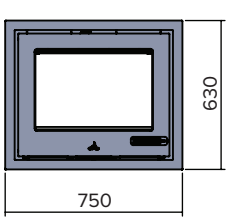

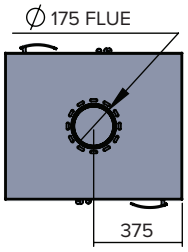

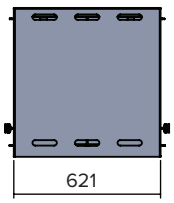

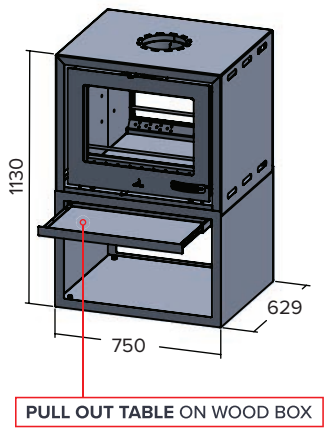

14 KW | FREESTANDING | DOUBLE SIDED | CONVECTION | DUAL AIR CONTROLS | 175 MM DIAMETER FLUE | TOP EXIT ONLY

Please refer to the **FEATURES & SAFETY REQUIREMENTS** common to all our wood stoves